CROWN RF

Crown RF
Box 49
Farmersville, TX 75442

972-771-4711
800-225-3429 (toll free)

E-Mail: sales@crownrf.com

Website: www.crownrf.com

Crown P/N: CRN-8021 (UG-201A)

Description:	**N (Male) – BNC (Female)**
Body:	**Nickel / Brass**
Insulation:	**Teflon**
Contact:	**Gold / BeCu**
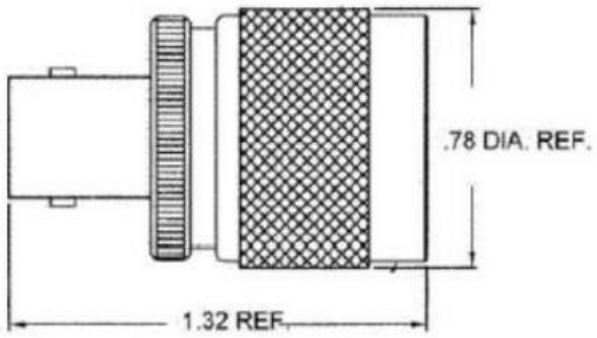
***** ROHS COMPLIANT *****