# CROWN RF

Crown RF
Box 49
Farmersville, TX 75442

972-771-4711
800-225-3429 (toll free)

**E-Mail:** sales@crownrf.com

**Website:** www.crownrf.com

## Crown P/N: CRN-8030BH (UG-30D)

**Description:** N (Female - Female) Bulkhead Mount

**Body:** Tri-Metal / Brass

**Insulation:** Teflon

**Contact:** Gold / BeCu **50 ohm**

***** ROHS COMPLIANT *****

Pricing*

| | |
|---|---|
| 1-9 | $11.89 |
| 10-24 | $11.21 |
| 25-49 | $10.45 |
| 50- | Send RFQ |
| 100+ | * |

* Prices subject to change without notice.
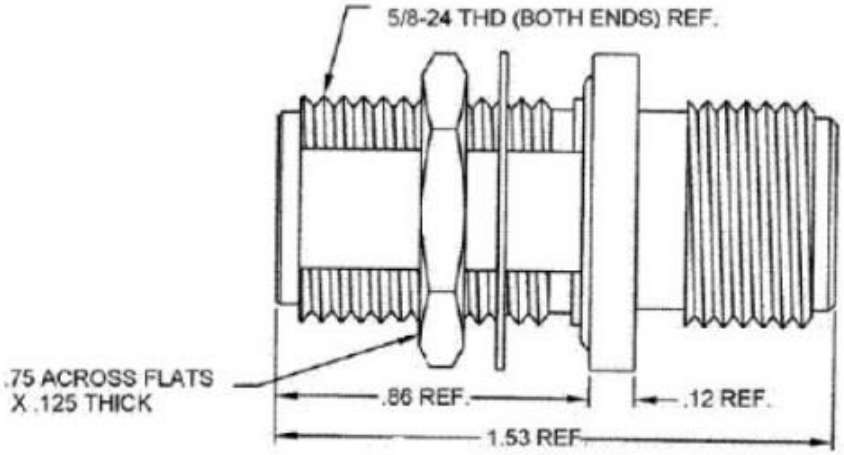
Contact sales@crownrf.com for current pricing and availability.